UNIVERSITY OF CAMBRIDGE INTERNATIONAL EXAMINATIONS
General Certificate of Education
Advanced Subsidiary Level and Advanced Level

CANDIDATE NAME

CENTRE NUMBER

CANDIDATE NUMBER

4583028849

PHYSICS **9702/33**

Paper 3 Advanced Practical Skills 1 **May/June 2013**

2 hours

Candidates answer on the Question Paper.

Additional Materials: As listed in the Confidential Instructions.

READ THESE INSTRUCTIONS FIRST

Write your Centre number, candidate number and name on all the work you hand in.
Write in dark blue or black pen.
You may use a pencil for any diagrams, graphs or rough working.
Do not use staples, paper clips, highlighters, glue or correction fluid.
DO **NOT** WRITE IN ANY BARCODES.

Answer **both** questions.
You will be allowed to work with the apparatus for a maximum of one hour for each question.
You are expected to record all your observations as soon as these observations are made, and to plan the presentation of the records so that it is not necessary to make a fair copy of them.
You are reminded of the need for good English and clear presentation in your answers.

Electronic calculators may be used.
You may lose marks if you do not show your working or if you do not use appropriate units.

Additional answer paper and graph paper should be used only if it becomes necessary to do so.

At the end of the examination, fasten all your work securely together.
The number of marks is given in brackets [ ] at the end of each question or part question.

For Examiner's Use	
1	
2	
Total	

This document consists of **11** printed pages and **1** blank page.

© UCLES 2013

You may not need to use all of the materials provided.

For Examiner's Use

1 In this experiment, you will determine the resistivity of a metal in the form of a wire.

(a) (i) Measure and record the diameter d of the short sample of wire that is attached to the card. You may remove the wire from the card.

d = ...[1]

(ii) Calculate the cross-sectional area A of the wire, in m^2, using the formula

$$A = \frac{\pi d^2}{4}.$$

A = ... m^2

(b) (i) Using the wire attached to the metre rule, set up the circuit shown in Fig. 1.1.

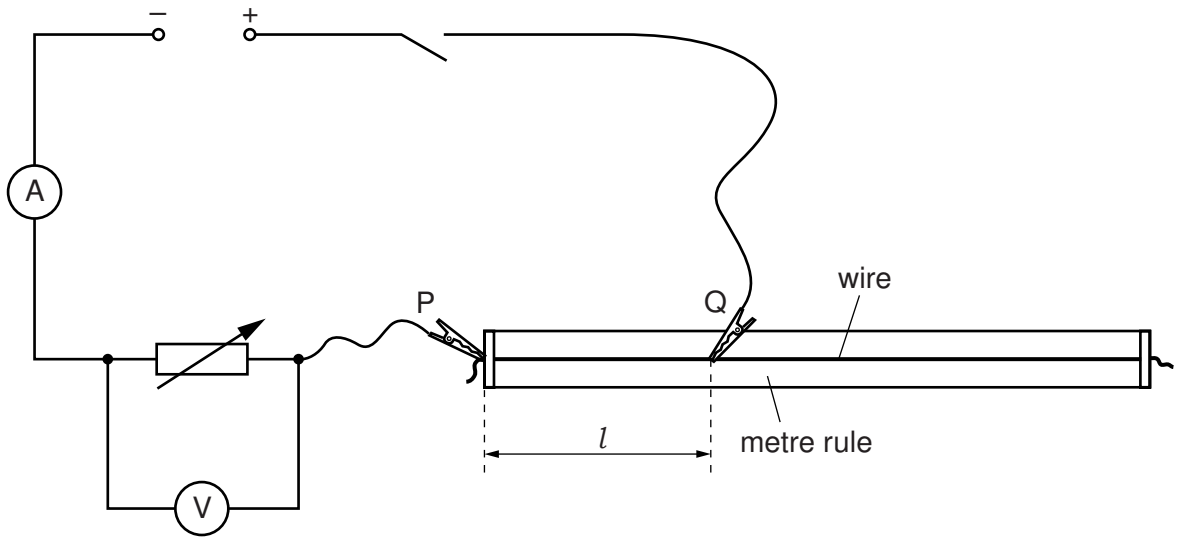

Fig. 1.1

There are two crocodile clips labelled P and Q.
P will remain in the same position throughout the experiment.
Q can be moved to different positions along the wire.

© UCLES 2013

For Examiner's Use

(ii) Position the slider approximately half-way along the rheostat (variable resistor).

(iii) Attach Q approximately half-way along the wire.

(iv) Switch on the power supply.

(v) Measure and record the length l of wire between P and Q.
Record the voltmeter reading V.

l = ... m

V = ... V
[1]

(vi) Record the ammeter reading I.
(1 mA = 0.001 A)

I = ... A

(vii) Switch off the power supply.

(c) (i) Reposition Q at a new distance l from P.

(ii) Switch on the power supply.

(iii) Adjust the slider on the rheostat until the ammeter reading is the same value as in **(b)(vi)**.

(iv) Measure and record the length l of wire between P and Q.
Record the voltmeter reading V.

l = ... m

V = ... V

(v) Switch off the power supply.

© UCLES 2013

[Turn over

(d) Repeat **(c)** until you have six sets of readings of l and V.

For Examiner's Use

For each value of l, adjust the slider on the rheostat so that the ammeter reading I remains constant at the value in (b)(vi).

You may find it helpful to copy your value from **(b)(vi)** here.

I = ... A

Include values of $\frac{V}{l}$ and $\frac{1}{l}$ in your table.

[10]

(e) (i) Plot a graph of $\frac{V}{l}$ on the y-axis against $\frac{1}{l}$ on the x-axis. [3]

(ii) Draw the straight line of best fit. [1]

(iii) Determine the gradient and y-intercept of this line.

gradient = ...

y-intercept = ...

[2]

© UCLES 2013

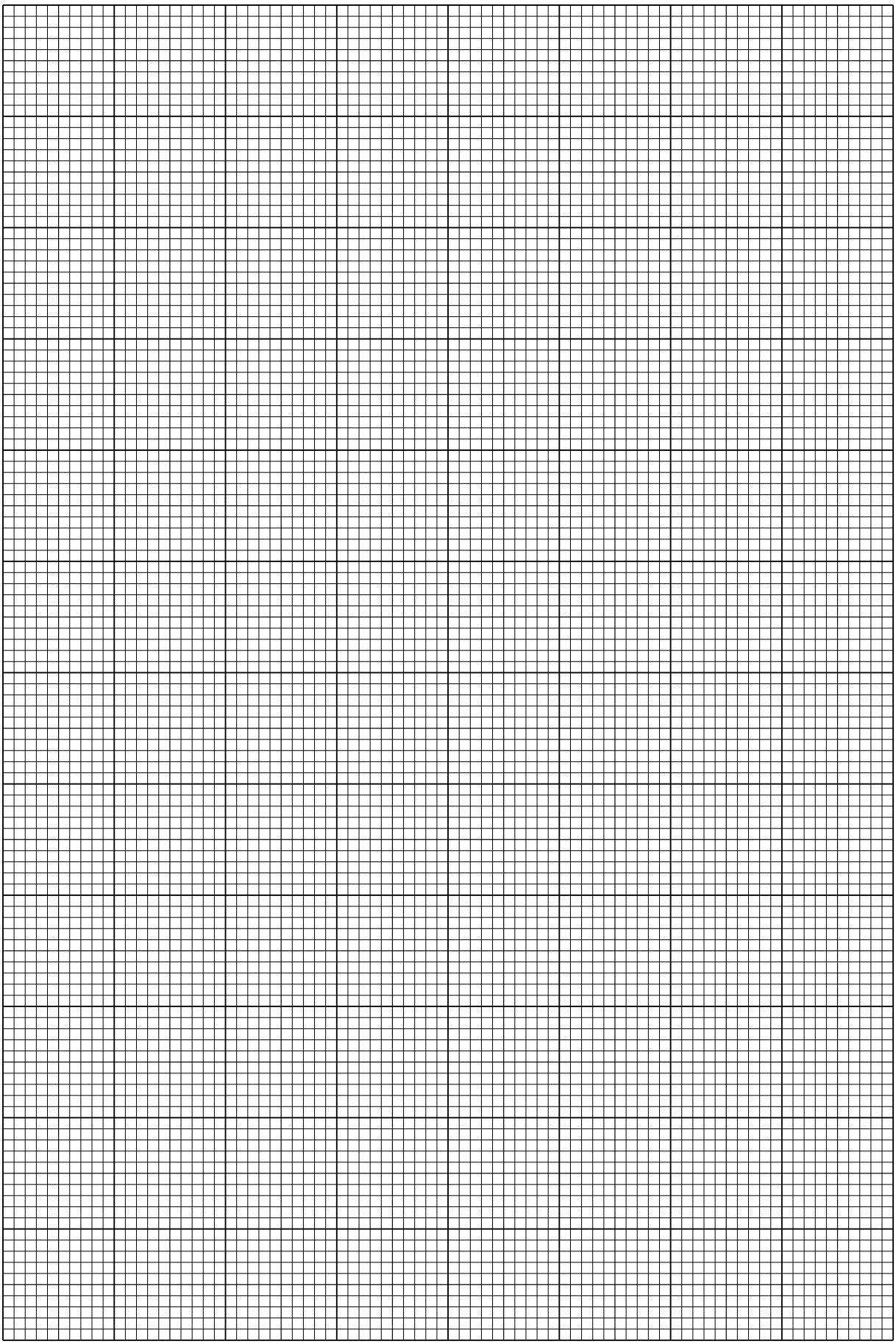

For Examiner's Use

(f) The quantities V and l are related by the equation

$$\frac{V}{l} = \frac{M}{l} - N$$

where M and N are constants.

For Examiner's Use

(i) Use your answers in **(e)(iii)** to determine values for M and N.

M = ... V

N = ... V m^{-1} [1]

(ii) The resistivity ρ of the material of the wire, in Ω m, can be found using the relationship

$$\rho = \frac{NA}{I}.$$

Using your answers in **(a)(ii)**, **(b)(vi)** and **(f)(i)**, calculate a value for ρ.

ρ = ... Ω m [1]

You may not need to use all of the materials provided.

For Examiner's Use

2 In this experiment, you will investigate how the loss of gravitational potential energy of a rolling ball depends on its initial height.

(a) (i) Set up the two runways as shown in Fig. 2.1.

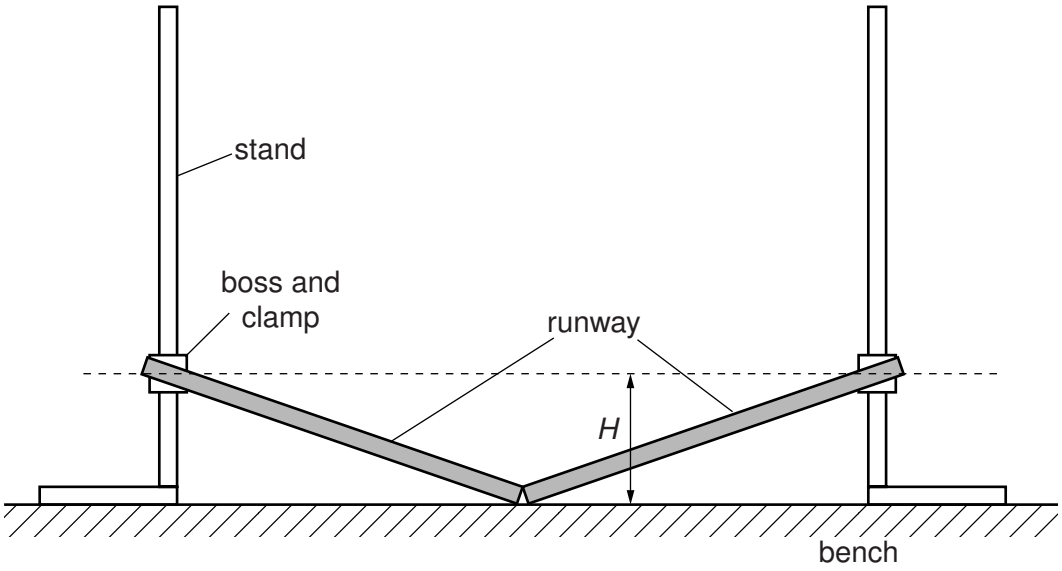

Fig. 2.1

One end of each runway should be resting on the bench. The other end should be clamped firmly at a height *H* approximately 15 cm above the bench.

The runways should be lined up so that a ball rolling down one would roll up the other.

(ii) Measure and record *H*.

H = ...[1]

(b) (i) Place the ball close to the top of one of the runways as shown in Fig. 2.2.

For Examiner's Use

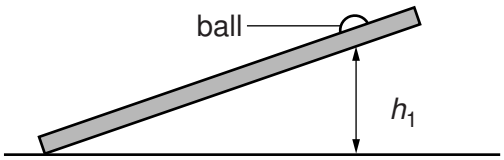

Fig. 2.2

(ii) Measure and record the height h_1 of the bottom of the ball above the bench.

h_1 = ...[1]

(iii) Estimate the percentage uncertainty in your value of h_1.

percentage uncertainty = ...[1]

(c) (i) Place the ball on the runway at the height given in **(b)(ii)**.

(ii) Release the ball.

(iii) The ball should roll down one runway and up the other one, as shown in Fig. 2.3.

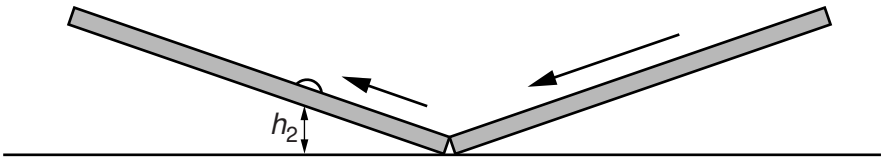

Fig. 2.3

Measure and record the maximum height h_2 of the bottom of the ball above the bench.

h_2 = ...[2]

(d) Calculate the fractional loss of energy F, where

$$F = \frac{(h_1 - h_2)}{h_1}.$$

For Examiner's Use

F = ...[1]

(e) Place the ball at a lower starting position so that the height h_1 is approximately half the value in **(b)(ii)**.
Repeat **(b)(ii)**, **(c)(ii)**, **(c)(iii)** and **(d)**.

h_1 = ...

h_2 = ...

F = ...
[3]

(f) It is suggested that the relationship between F and h_1 is

$$F^3 = \frac{k}{h_1}$$

where k is a constant.

For Examiner's Use

(i) Using your data, calculate two values of k.

first value of k = ...

second value of k = ... [1]

(ii) Justify the number of significant figures that you have given for your values of k.

.....

.....

.....[1]

(iii) Explain whether your results in **(f)(i)** support the suggested relationship.

.....

.....

.....

.....[1]

© UCLES 2013

(g) (i) Describe four sources of uncertainty or limitations of the procedure for this experiment.

For Examiner's Use

1. .....

.....

2. .....

.....

3. .....

.....

4. .....

.....

[4]

(ii) Describe four improvements that could be made to this experiment. You may suggest the use of other apparatus or different procedures.

1. .....

.....

2. .....

.....

3. .....

.....

4. .....

.....

[4]

© UCLES 2013

BLANK PAGE

Permission to reproduce items where third-party owned material protected by copyright is included has been sought and cleared where possible. Every reasonable effort has been made by the publisher (UCLES) to trace copyright holders, but if any items requiring clearance have unwittingly been included, the publisher will be pleased to make amends at the earliest possible opportunity.

University of Cambridge International Examinations is part of the Cambridge Assessment Group. Cambridge Assessment is the brand name of University of Cambridge Local Examinations Syndicate (UCLES), which is itself a department of the University of Cambridge.

© UCLES 2013